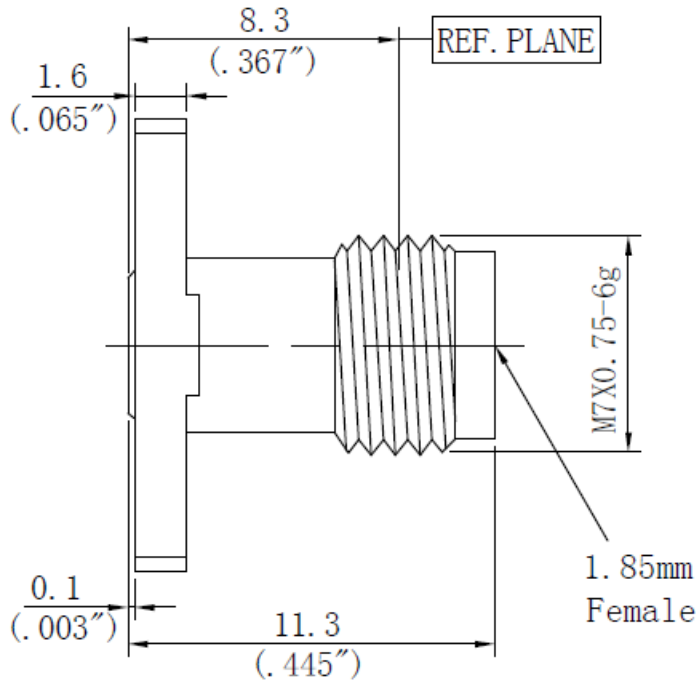

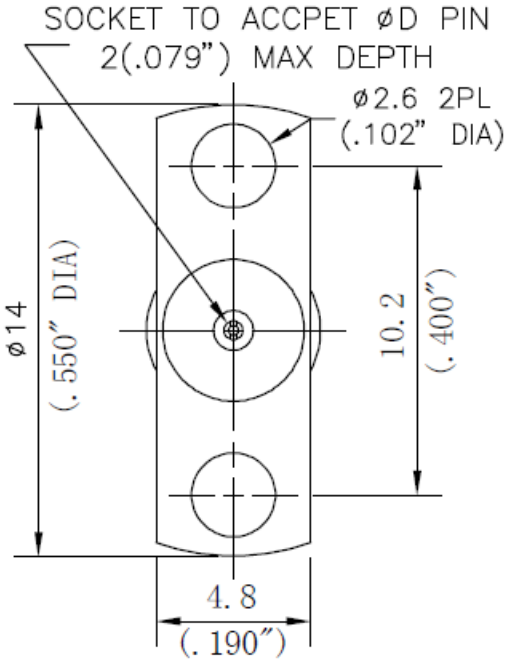

Part Number	Pin Diameter D
380P09F5	0.23mm / 0.009"
380P12F5	0.30mm / 0.012"

Specifications:

Impedance= 50 Ω
Frequency= DC - 65 Ghz
VSWR : DC - 65 Ghz = 1.25:1 max
Contact Resistance: Center Contact ≤ 3.0 mΩ
Contact Resistance: Housing ≤ 2 .5 mΩ
Insulation Resistance ≥ 3000 MΩ
Dielectric Withstanding Voltage = 500 V
Durability = 500 cycles
Temperature Range= -55 ºC - +165 ºC
Interfaces: **PER IEC - 61169**

Material / Finish

Housing: Stainless Steel SU303 Polished / Passivated
Center Condact: Beryllium Copper Gold plated (MIL-G-45204)
Insulators:PEI

SigaTek

423 Black Oak Ridge Rd.
Wayne, NJ 07470
Ph: 973-706-8475, Fax: 973-832-4435
www.sigatek.com

380P09F5
380P12F5

1.85mm Female Connectors

Dimensions are in inches and (mm)
Decimal Tolerance:
2 place +- 0.020
3 place +- 0.010

CAGE CODE : 69UC1

Notes: All dimensions are typical unless they are specified.
Specifications are subject to change at any time without any notice.
Copy or distribution of this drawing in not allowed without Sigatek's approval.